# Bumblebee 1.0

## Datasheet

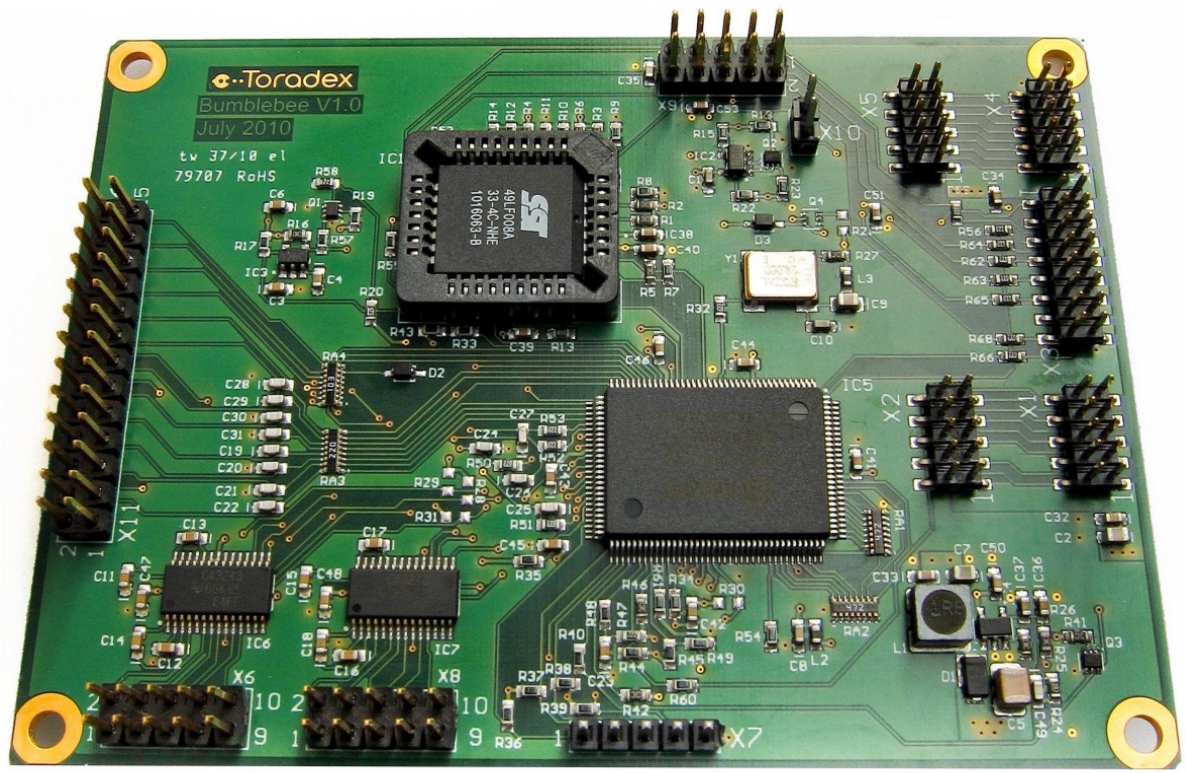


**Revision history**

| Date | Doc. Rev. | Bumblebee | Changes |
|---|---|---|---|
| 03-Jen-11 | Rev. 1.0 | V1.0 | Initial Release |
| 24-Mar-11 | Rev. 0.91 | V1.0 | RS-232 header (X6, X8), chapter 3.2.6, 3.2.7<br>Table order change (3.2.8, 3.2.9) |

# Contents

**1. Introduction ... 3**
1.1 Overview ... 3
1.2 Reference Document ... 3
1.2.1 Daisy Carrier Board ... 3
1.2.2 Pico-ITX form Factor ... 3

**2. Features ... 3**
2.1 Overview ... 3
2.1.1 Super IO Controller ... 3
2.1.2 External BIOS Flash Memory ... 3
2.1.3 FlexyICE Interface ... 3
2.2 Block Diagram ... 4

**3. Interfaces ... 5**
3.1 Bumblebee connectors: Physical Drawing ... 5
3.2 Bumblebee connectors: Pin Assignment ... 6
3.2.1 $I^2C$ / SMB IN Header (X1) ... 6
3.2.2 $I^2C$ / SMB OUT Header (X2) ... 6
3.2.3 LPC Header (X3) ... 6
3.2.4 GPIO IN Header (X4) ... 6
3.2.5 GPIO OUT Header (X5) ... 7
3.2.6 RS-232 0 (X6) ... 7
3.2.7 RS-232 1 (X8) ... 7
3.2.8 FlexyICE LPC Interface Header (X9) ... 7
3.2.9 PS2 Header(X7) ... 8
3.2.10 Parallel Port Header (X11) ... 8
3.2.11 Bumblebee BIOS selecting Jumper (X10) ... 8

**4. Mechanical Data ... 9**
4.1 Dimensions ... 9
4.2 Mass ... 9

# 1. Introduction

## 1.1 Overview

Bumblebee is an extension board for use in conjunction with the Daisy carrier board when fitted with a Robin NanoETX computer module. It connects to the Daisy carrier board through 2mm pitch pin headers using the provided ribbon cable. The principle features include a Super IO controller, which provides two Serial ports and a single Parallel port, and flash memory for supporting a secondary BIOS image which can be used to boot from instead of the internal BIOS on the installed Robin module. Bumblebee adheres to the Pico-ITX form factor and can therefore be stacked with the Daisy carrier board using screws and stand-offs to provide a space optimised solution.

## 1.2 Reference Document

For detailed technical information regarding the Daisy carrier board and the Pico-ITX standard, please refer to the documents listed below.

### 1.2.1 Daisy Carrier Board

http://www.toradex.com/En/Products/Robin/Boards/Daisy

### 1.2.2 Pico-ITX form Factor

http://www.via.com.tw/en/downloads/whitepapers/initiatives/spearhead/pico-itx_form_factor.pdf

# 2. Features

## 2.1 Overview

The LPC (Low Pin Count) bus from the Daisy carrier board is connected to the Super IO Controller, to an external Flash Memory used to store a BIOS image, and to a FlexyICE (programmable ROM emulator) compatible communication interface.

### 2.1.1 Super IO Controller

The Super IO controller features the following interfaces:

- Two serial communication ports (UARTs) available through a 10 way (2 rows x 5 way) 2.54mm pitch header with a pin key at pin 10 capable of being connected to an industry standard 10 way IDC to 9 way D-type male connector
- Parallel port available through a 26 way (2 rows x 13 way) 2.54 mm pitch header
- PS2 port available through a 5 way (1 row x 5 way) 2.54 mm header

### 2.1.2 External BIOS Flash Memory

By inserting jumper (X10) it is possible to force the Robin module connected to the Daisy carrier board to boot from the BIOS image which is stored in the flash memory. This feature can be used to recover a Robin module which can no longer boot from its own internal BIOS (e.g. due to BIOS corruption caused by an interruption to a BIOS update attempt).

### 2.1.3 FlexyICE Interface

FlexyICE is an USB ROM emulator featuring LPC BUS header interface that connects to the target via an LPC header and to a host via USB.
By connecting this device to connector X9 and ensuring jumper X10 is removed, the Robin connected to Daisy will boot from the BIOS emulated by the FlexyICE device.
For further information regarding this device please refer to the FlexyICE website: http://www.artecgroup.com/flexyice.

The following table describes the supported configurations based on jumper X10 setting and the FlexyICE device connection:

| Jumper X10 | FlexyICE | Booting BIOS |
|---|---|---|
| Empty | Disconnected | Robin on board BIOS |
| Empty | Connected | FlexyICE |
| Installed | Disconnected | Bumblebee BIOS |
| Installed | Connected | FlexyICE |

## 2.2 Block Diagram

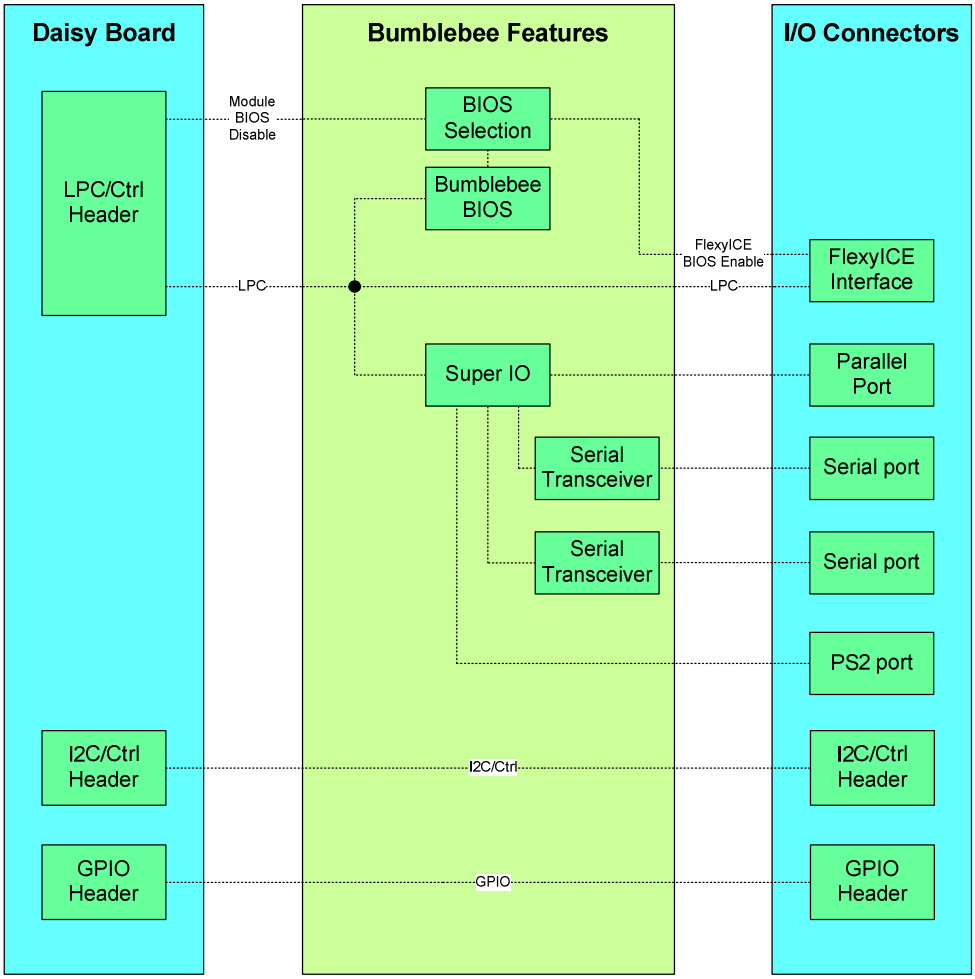


Fig.1 Bumblebee Block Diagram

# 3. Interfaces

## 3.1 Bumblebee connectors: Physical Drawing

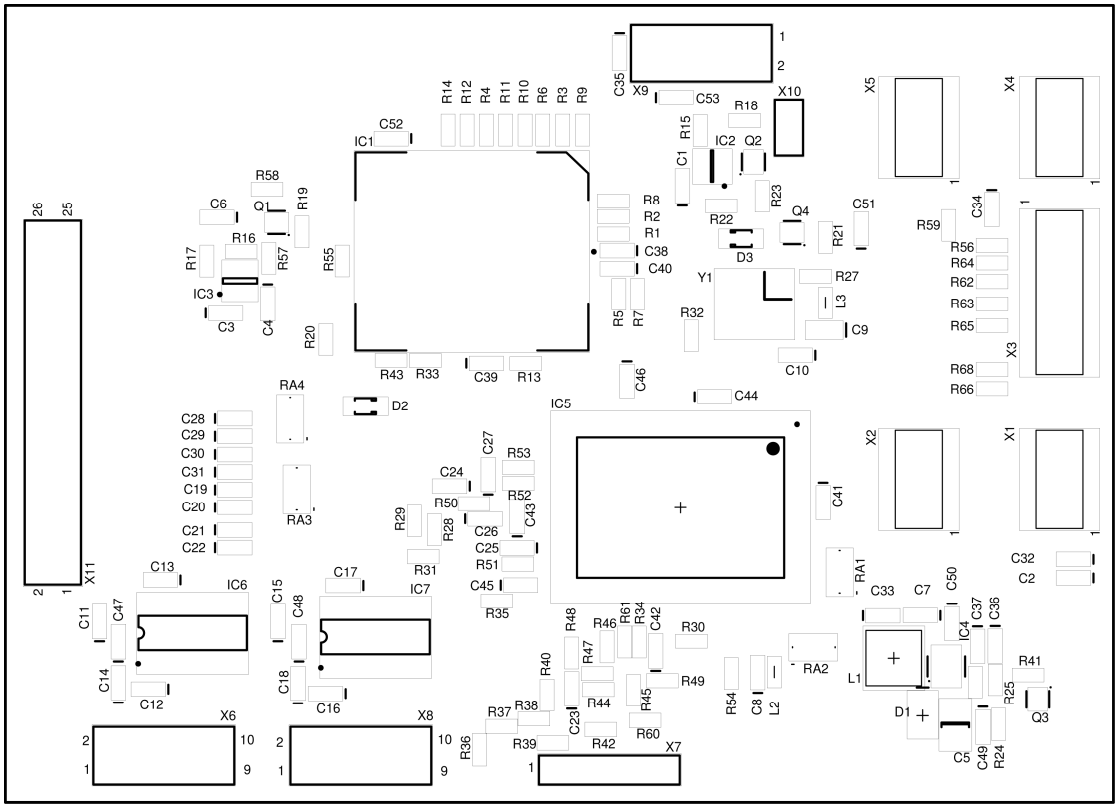


Fig 2: Assembly drawing of Bumblebee

| Ref | Description | Remarks |
|---|---|---|
| X1 | I²C / SMB IN Header | By connecting Daisy to Bumblebee using a single 44 way Ribbon Cable, the I2C / SMB signals will be available on Bumblebee through the header X2 |
| X2 | I I²C / SMB OUT Header | This Header is directly connected to the X1 Header |
| X3 | LPC Header | |
| X4 | GPIO IN Header | By connecting Daisy to Bumblebee using a single 44 way Ribbon Cable, the GPIO signals will be available on Bumblebee through the header X5 |
| X5 | GPIO OUT Header | This Header is directly connected to the X4 Header |
| X6 | UART 0 | Standard 10 way IDC to 9 way D-Type pin out |
| X8 | UART 1 | Standard 10 way IDC to 9 way D-Type pin out |
| X7 | PS2 Header | This is not a standard pin out Header |
| X9 | FlexyICE LPC interface Header | |
| X10 | Bumblebee BIOS selecting Jumper | |
| X11 | Parallel Port Header | |

## 3.2 Bumblebee connectors: Pin Assignment

### 3.2.1 I²C / SMB IN Header (X1)

| Pin | Description | Voltage | Active | Remarks |
|---|---|---|---|---|
| 1 | +3V3 EXP | +3.3V | S0 | |
| 2 | CTRL PWR OK | | | |
| 3 | CTRL WAKE 1 | | | |
| 4 | GND | | | |
| 5 | I²C Clock | | | |
| 6 | I²C Data | | | |
| 7 | SMB Clock | | | |
| 8 | SMB Data | | | |
| 9 | SMB Alert | | | |
| 10 | CTRL BATTLOW | | | |

### 3.2.2 I²C / SMB OUT Header (X2)

Since the X2 Header is directly connected to the X1 Header, the pin assignment is the same.

### 3.2.3 LPC Header (X3)

| Pin | Description | Voltage | Active | Remarks |
|---|---|---|---|---|
| 1 | CTRL System Reset | | | |
| 2 | CTRL Power Button | | | |
| 3 | CTRL SUS Status | | | |
| 4 | CTRL BIOS DISABLE | | | |
| 5 | LPC SERIRQ | | | |
| 6 | LPC FRAME | | | |
| 7 | LPC AD 0 | | | |
| 8 | GND | | | |
| 9 | LPC AD 1 | | | |
| 10 | LPC AD 2 | | | |
| 11 | LPC AD 3 | | | |
| 12 | GND | | | |
| 13 | LPC DRQ 0 | | | |
| 14 | LPC DRQ 1 | | | |
| 15 | LPC Clock | | | |
| 16 | GND | | | |

### 3.2.4 GPIO IN Header (X4)

| Pin | Description | Voltage / range | Active | Remarks |
|---|---|---|---|---|
| 1 | +3V3 EXP | +3.3V | S0 | |
| 2 | GPIO4 | 0 – +3.3V | S5-S0 | |
| 3 | GPIO0 | 0 – +3.3V | S5-S0 | |
| 4 | GPIO5 | 0 – +3.3V | S5-S0 | |
| 5 | GPIO1 | 0 – +3.3V | S5-S0 | |

### 3.2.5 GPIO OUT Header (X5)

Since the X5 Header is directly connected to the X4 Header, the pin assignment is the same.

### 3.2.6 RS-232 0 (X6)

This connector is a 10 way (2 rows x 5 way) 2.54mm pitch header capable of being connected to an industry standard DTK/INTEL 10 way IDC to 9 way D-type male connector.

| Pin | Description | Voltage / range | Active | Remarks |
|---|---|---|---|---|
| 1 | DCD0# | | | |
| 2 | DSR0# | | | |
| 3 | RX0 | | | |
| 4 | RTS0# | | | |
| 5 | TX0 | | | |
| 6 | CTS0# | | | |
| 7 | DTR0# | | | |
| 8 | RI0# | | | |
| 9 | GND | | | |

### 3.2.7 RS-232 1 (X8)

This connector is a 10 way (2 rows x 5 way) 2.54mm pitch header capable of being connected to an industry standard DTK/INTEL 10 way IDC to 9 way D-type male connector.

| Pin | Description | Voltage / range | Active | Remarks |
|---|---|---|---|---|
| 1 | DCD1# | | | |
| 2 | DSR1# | | | |
| 3 | RX1 | | | |
| 4 | RTS1# | | | |
| 5 | TX1 | | | |
| 6 | CTS1# | | | |
| 7 | DTR1# | | | |
| 8 | RI1# | | | |
| 9 | GND | | | |

### 3.2.8 FlexyICE LPC Interface Header (X9)

| Pin | Description | Voltage | Active | Remarks |
|---|---|---|---|---|
| 1 | RESET# | | | |
| 2 | LPC AD 0 | | | |
| 3 | LPC AD 1 | | | |
| 4 | LPC AD 2 | | | |
| 5 | LPC AD 3 | | | |
| 6 | LPC FRAME# | | | |
| 7 | DEV PRESENT | | | |
| 8 | LPC Clock | | | |
| 9 | GND | | | |
| 10 | +3V3 EXP | +3.3V | S0 | |

### 3.2.9 PS2 Header(X7)

| Pin | Description | Voltage / range | Active | Remarks |
|---|---|---|---|---|
| 1 | KCLK | | | |
| 2 | KDAT# | | | |
| 3 | MDAT | | | |
| 4 | MCLK# | | | |
| 5 | GND | | | |

### 3.2.10 Parallel Port Header (X11)

| Pin | Description | Voltage | Active | Remarks |
|---|---|---|---|---|
| 1 | STB# | | | |
| 2 | AFD# | | | |
| 3 | PD 0 | | | |
| 4 | ERR# | | | |
| 5 | PD 1 | | | |
| 6 | INIT# | | | |
| 7 | PD 2 | | | |
| 8 | SLIN# | | | |
| 9 | PD3 | | | |
| 10 | GND | | | |
| 11 | PD 4 | | | |
| 12 | GND | | | |
| 13 | PD 5 | | | |
| 14 | GND | | | |
| 15 | PD 6 | | | |
| 16 | GND | | | |
| 17 | PD 7 | | | |
| 18 | GND | | | |
| 19 | ACK# | | | |
| 20 | GND | | | |
| 21 | BUSY | | | |
| 22 | GND | | | |
| 23 | PE | | | |
| 24 | GND | | | |
| 25 | SCLT | | | |
| 26 | NC | | | |

### 3.2.11 Bumblebee BIOS selecting Jumper (X10)

| Pin | Description | Voltage / range | Active | Remarks |
|---|---|---|---|---|
| 1 | MODULE_BIOS_DISABLE# | | | |
| 2 | GND | | | |

# 4. Mechanical Data

## 4.1 Dimensions

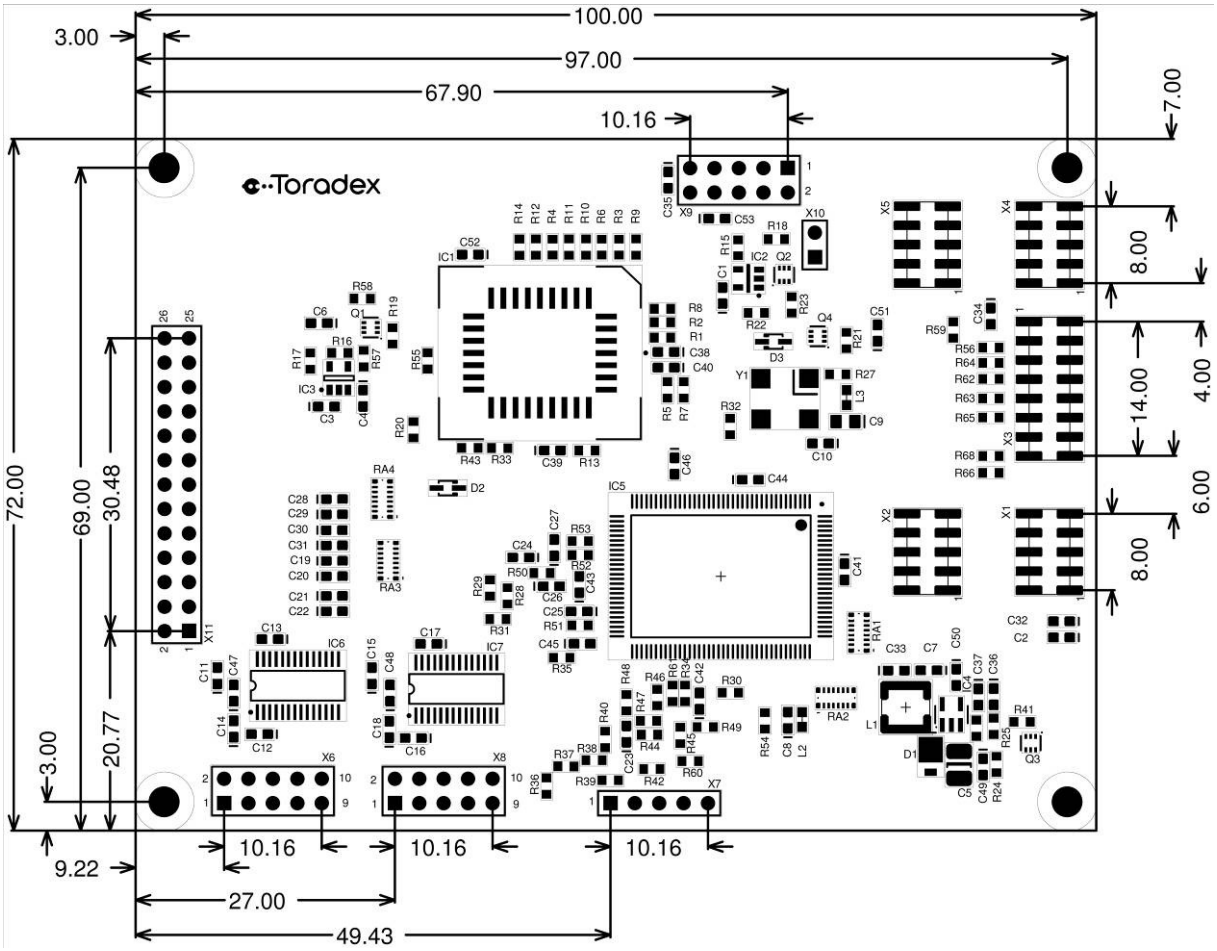


Fig 3: Bumblebee Dimensions

## 4.2 Mass

The mass of Bumblebee with the Flash Memory 49LF008A installed is 38g.

**Disclaimer:**

Copyright © Toradex AG. All rights reserved. All data is for information purposes only and not guaranteed for legal purposes. Information has been carefully checked and is believed to be accurate; however, no responsibility is assumed for inaccuracies. Brand and product names are trademarks or registered trademarks of their respective owners. Specifications are subject to change without notice.

**Trademark Acknowledgement:**

Brand and product names are trademarks or registered trademarks of their respective owners.